Altis Gen5

96671942 ALG5 GB 1368W 0.85A 565V 2CH RDMX

IP66	IK08				T_a45

Altis Gen5

Class I, DMX RDM programmable gearbox, with 2 independant output channels and IP66 enclosure, for TV broadcasting applications. Suitable for dedicated 288 / 312 / 336 LED Altis floodlight, to be installed remotely up to 200m from the floodlight. Nominal input voltage: 200-440, output current 850mA with DMX RDM configurable single-channel, IEEE 1789 flicker recommended practice compliant suitable for super slow motion camera filming, surge level 10kV for both common mode and differential.

Connection from mains via terminal blocks. Mains supply must be fused according to local safety regulations.

Weight: 5.4 kg.

TLG_ALT5_F_GB_1700.jpg

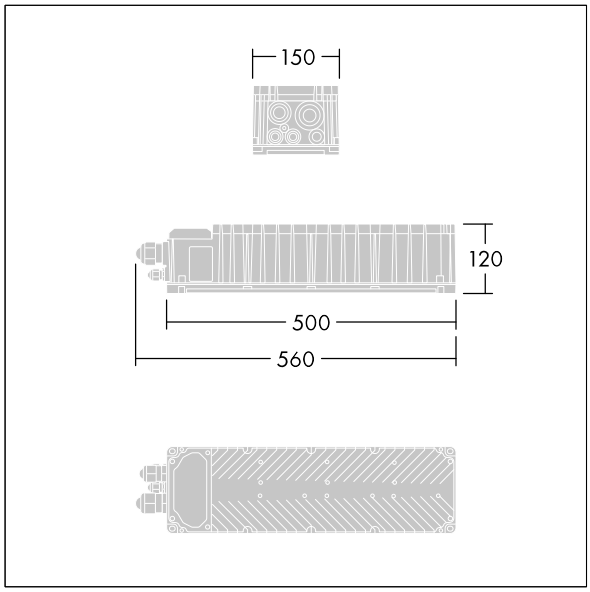

TLG_ALT5_M_GB.wmf

All values marked with an * are rated values. Unless stated otherwise, the values apply to an ambient temperature of 25°C.

Thorn Lighting is constantly developing and improving its products. The right is reserved to change specifications without prior notification or public announcement.
© Thorn Lighting