Champion

96633431 CHAMPION LED BIRD DETERRENT

Champion

This is a support covered with spikes, which is mounted on top of the floodlight to prevent birds landing. Their excrement could damage the paint and in the case of coastal environments, create corrosion. This accessory is mandatory in coastal environments.

TLG_CHPL_F_PERS_BIRD_DETERRENT.jpg

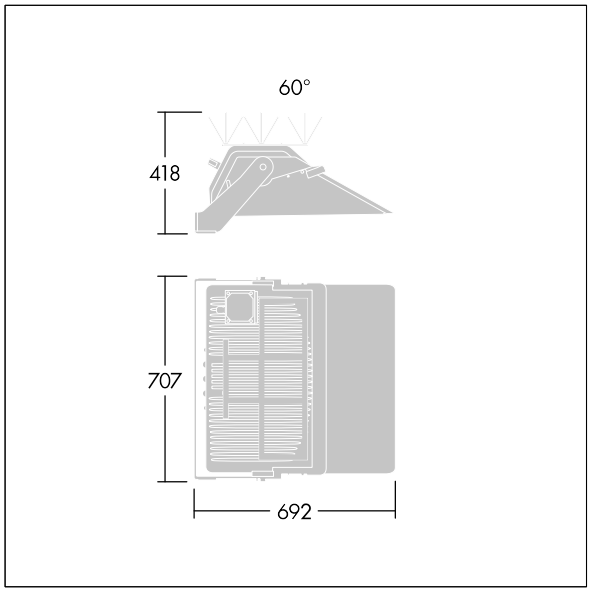

TLG_CHPL_M_LD6.wmf

All values marked with an * are rated values. Unless stated otherwise, the values apply to an ambient temperature of 25°C.
Thorn Lighting is constantly developing and improving its products. The right is reserved to change specifications without prior notification or public announcement.
© Thorn Lighting