Champion

96633215 CHAMPION 264L-740 V1 VSR ANT

ISO 9223 C5 | UKCA | IP66 | IK08 | 0,8m | Ta25

Champion

A high performance LED floodlight with 55° asymmetrical light distribution from 264 LEDs. External control gear, to be ordered separately. Class I electrical, IP66, Impact strength: IK08. Body: die-cast aluminium, powder coated textured anthracite (close to RAL7043). Enclosure: 4mm thick, toughened flat glass. Visor: Specular (reflective). Luminaire fixed by single bolt through Ø22mm central hole, or twin bolts through Ø15mm holes at 200mm centres. Aiming via simple aiming device (to be ordered separately). Ideal for sports fields and stadium or area lighting. Low flicker operation (<1%) suitable for HDTV broadcasting. Complete with 4000K LED with Colour Rendering Index min.: 70.

Dimensions: 688 x 707 x 315 mm
Weight: 22.4 kg
Scx: 0.196 m²

TLG_CHPL_F_PERS_GLOSSY.jpg

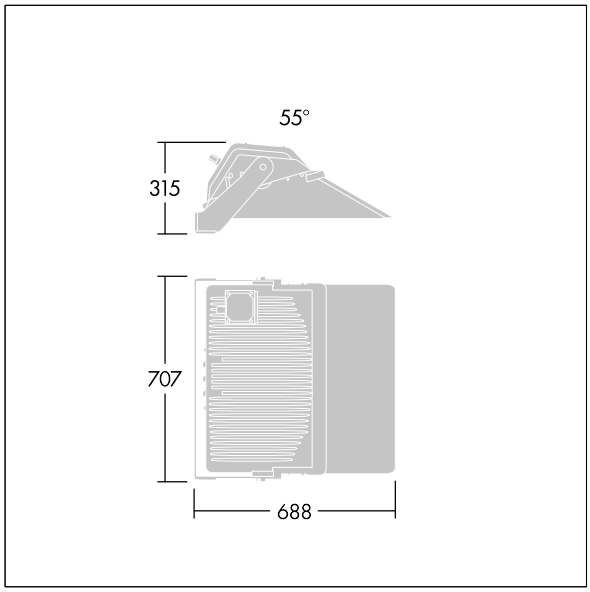

TLG_CHPL_M_LD1.wmf

This product contains a light source of energy efficiency class D.

All values marked with an * are rated values. Thorn uses tried and tested components from leading suppliers, however there may be isolated instances of technology-related failures of individual LEDs during the rated product lifetime. International standards set the tolerance in initial flux and connected load at ±10%. Unless stated otherwise, the values apply to an ambient temperature of 25°C.

Thorn Lighting is constantly developing and improving its products. The right is reserved to change specifications without prior notification or public announcement.
© Thorn Lighting

Champion

96633215 CHAMPION 264L-740 V1 VSR ANT

Thorn Lighting is constantly developing and improving its products. The right is reserved to change specifications without prior notification or public announcement.
© Thorn Lighting